US005327752A

United States Patent [19]

Myers et al.

[11] Patent Number: 5,327,752

[45] Date of Patent: Jul. 12, 1994

[54] COMPUTER EQUIPMENT LOCK

[75] Inventors: **Gary L. Myers**, River Grove, Ill.; **Stewart Carl**, Palo Alto; **Arthur H. Zarnowitz**, Burlingame, both of Calif.

[73] Assignee: **Kensington Microwave Limited**, San Mateo, Calif.

[21] Appl. No.: **119,314**

[22] Filed: **Sep. 9, 1993**

Related U.S. Application Data

[63] Continuation of Ser. No. 891,783, Jun. 1, 1992, abandoned.

[51] **Int. Cl.**[5] **E05B 69/00**

[52] **U.S. Cl.** **70/58**; 70/14; 70/491; 70/57; 248/553

[58] **Field of Search** 70/57, 58, 14, 18, 30, 70/49, 232, 491; 248/551, 553, 505

[56] **References Cited**

U.S. PATENT DOCUMENTS

3,785,183	1/1974	Sander	70/58
3,859,826	1/1975	Singer	70/371
4,057,984	11/1977	Avaiusini	70/58
4,858,455	8/1989	Kuo	70/491
4,938,040	7/1990	Humphreys, Jr.	70/58
5,024,072	6/1991	Lee	70/491

FOREIGN PATENT DOCUMENTS

1376011	12/1974	United Kingdom	70/491

Primary Examiner—Darnell M. Boucher
Attorney, Agent, or Firm—Townsend and Townsend Khourie and Crew

[57] **ABSTRACT**

An axial pin tubular lock for use in securing portable computers and other devices having spindle-accepting ports. The lock is bade up of an outer shell attached to a cable, an inner shell, a rotatable driver sleeve, a stationary tumbler sleeve, a rear scuff plate held in place by a combination of an adhesive and cooperative geometric engagement with the outer shell, a locking spindle extending through the driver and tumbler sleeves, a retaining plate and an anti-rotation extension which may be integrally formed with the retaining plate. The rotatable driver sleeve is equipped with an internally disposed detent which engage a groove on the spindle, thereby providing proper axial and radial alignment between the spindle and the driver sleeve. The internal surface of the stationary tumbler sleeve has an indented support surface, thus providing spindle support while permitting passage of the spindle head through the tumbler sleeve during assembly. The tumbler sleeve is held in place by a pin which engages a slot located on the sleeve's outer perimeter and by the retaining plate which is disposed against the sleeve's rearward face. The retaining plate is, in turn, held in place by both a spring and the spline detail of the inner shell. The spindle itself incorporates a curved surface design which distributes forces more evenly across the spindle surface, thereby reducing the potential for spindle failure.

7 Claims, 5 Drawing Sheets

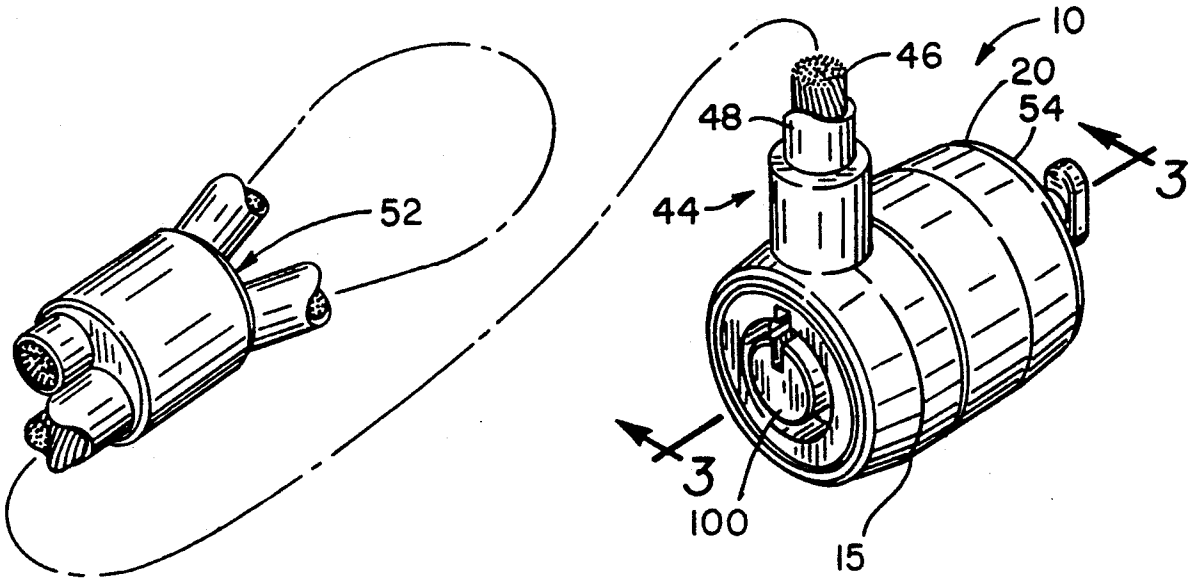

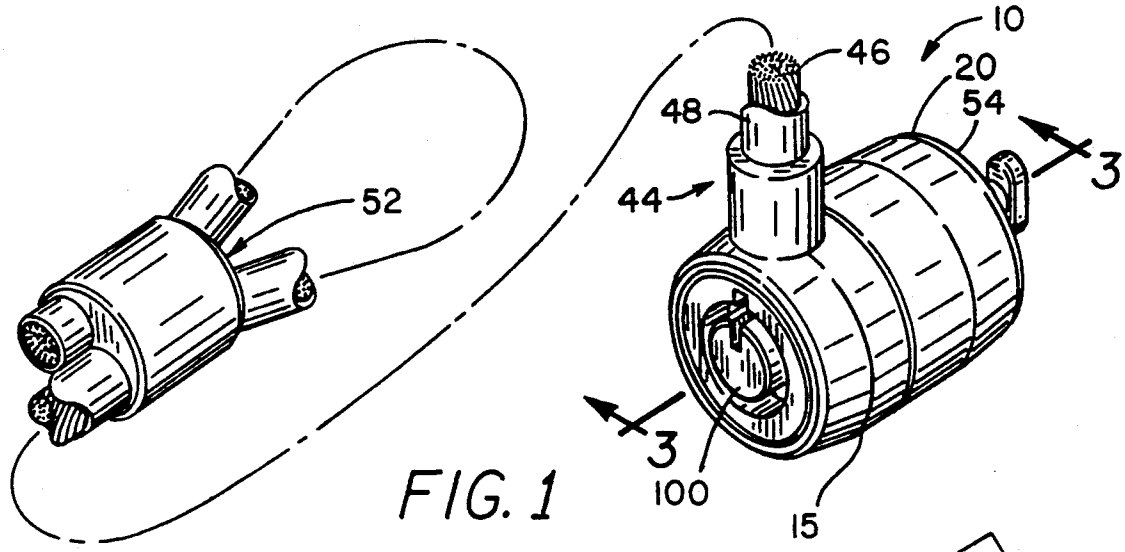
10
46
20
54
48
44
3
52
3
100
15

FIG. 1

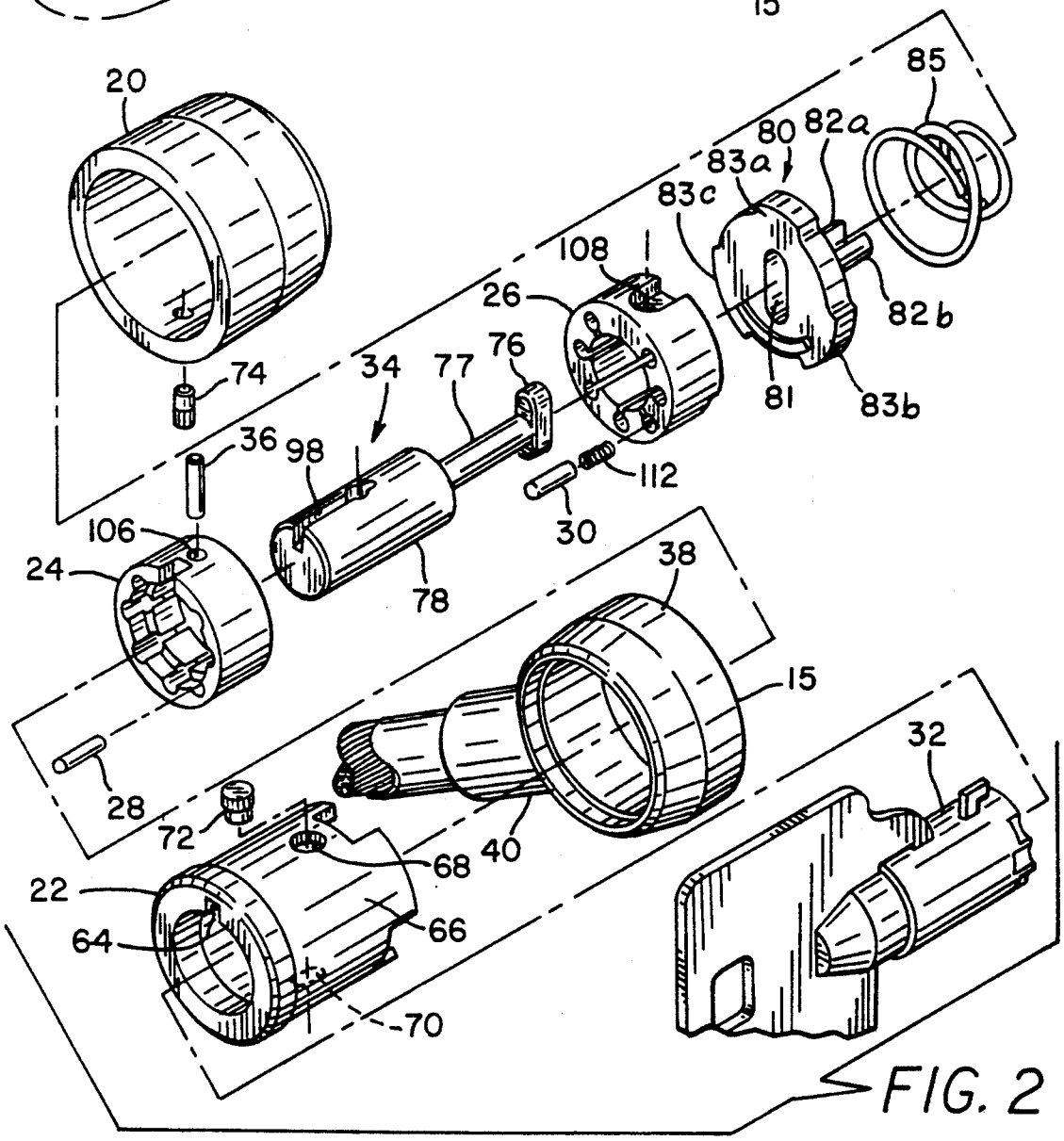
20
85
80
82a
83a
83c
108
26
82b
74
34
77
76
81
83b
36
98
112
30
106
24
78
38
15
32
28
72
68
40
22
66
64
70

FIG. 2

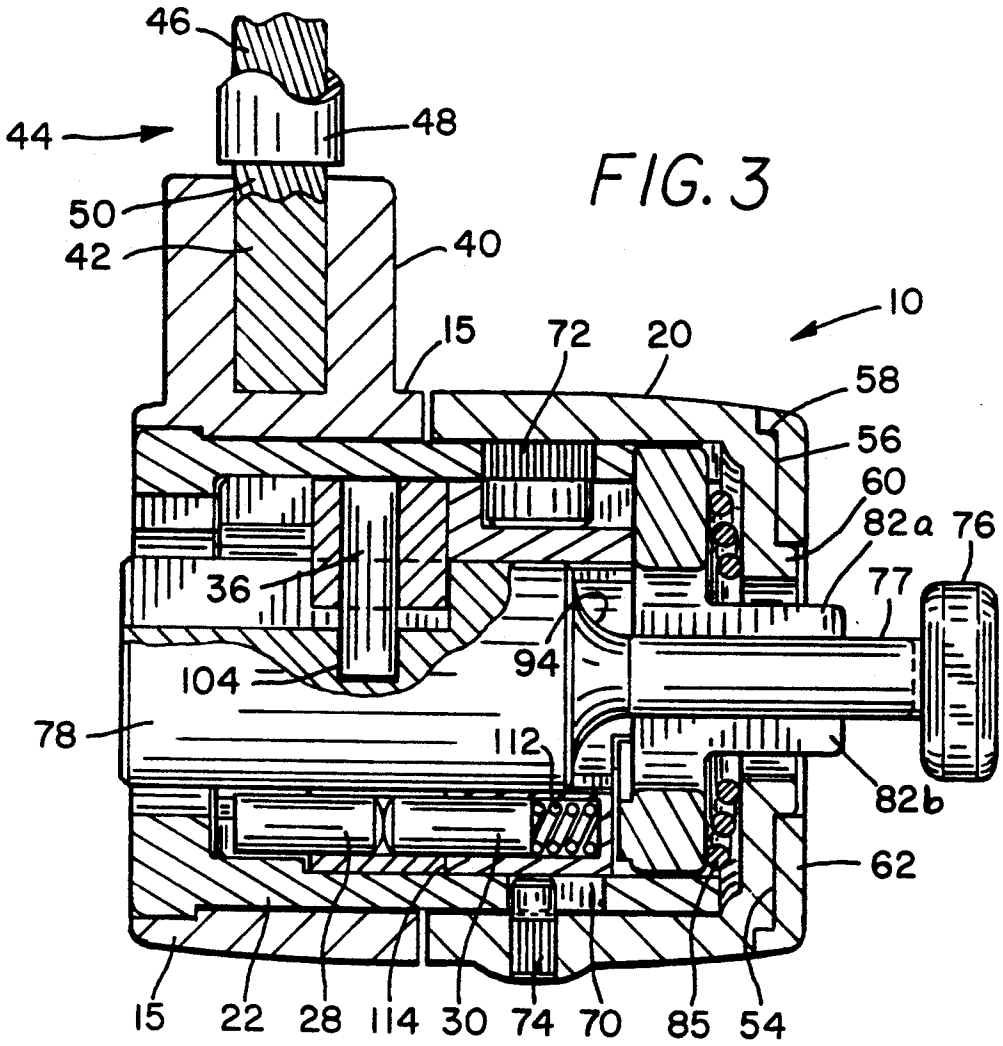
46
44
48
50
42
40
10
15
72
20
58
56
60
82a
76
77
36
94
104
78
112
82b
62
15
22
28
114
30
74
70
85
54

FIG. 3

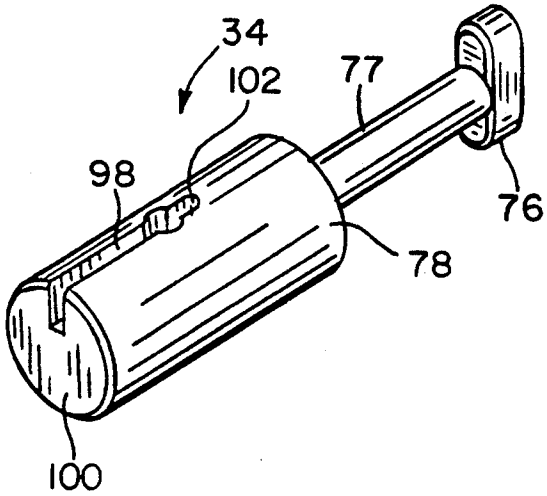
34
102
77
98
76
78
100

FIG. 5

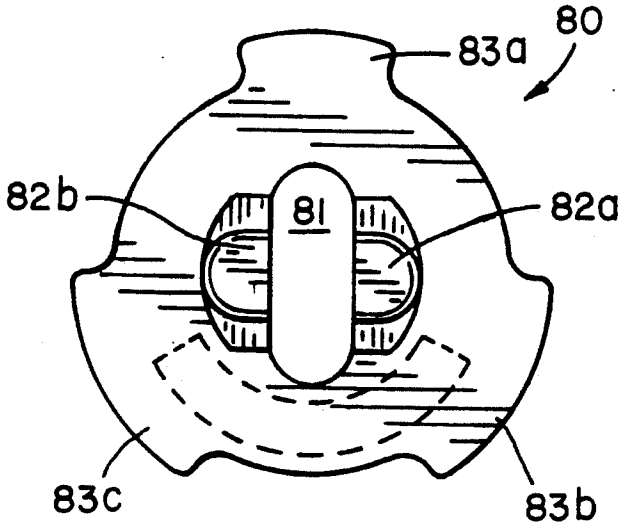

FIG. 4A

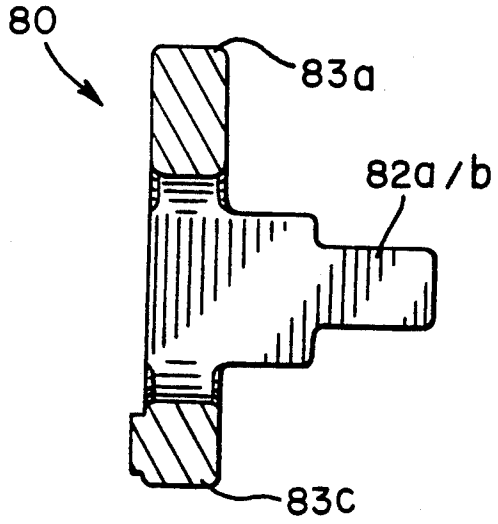

FIG. 4B

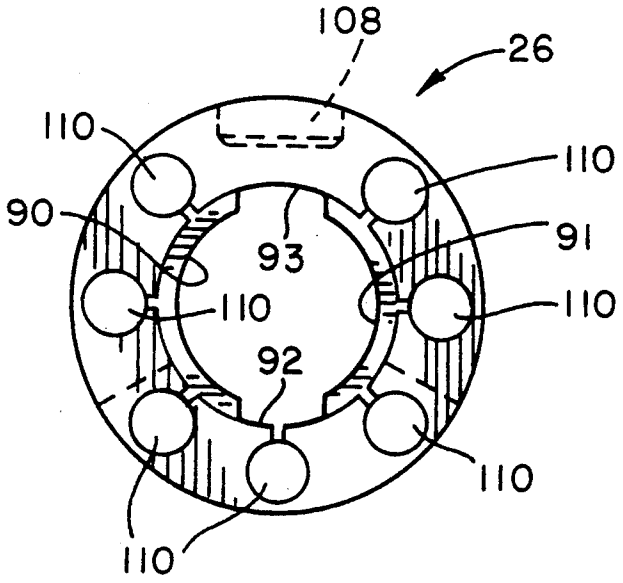

FIG. 6A

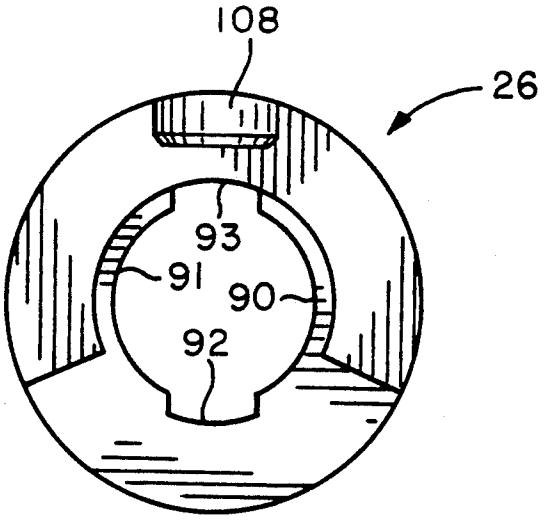

FIG. 6B

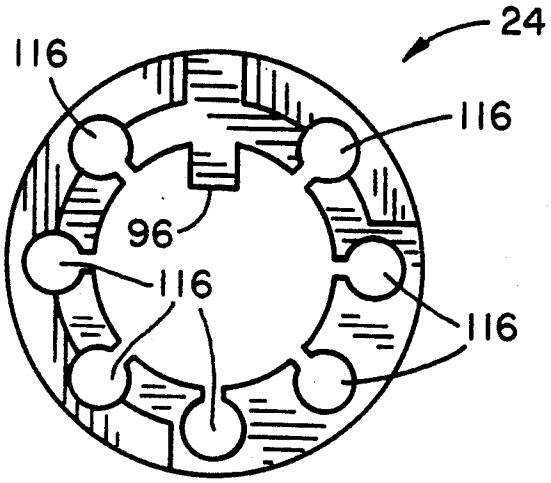

FIG. 7A

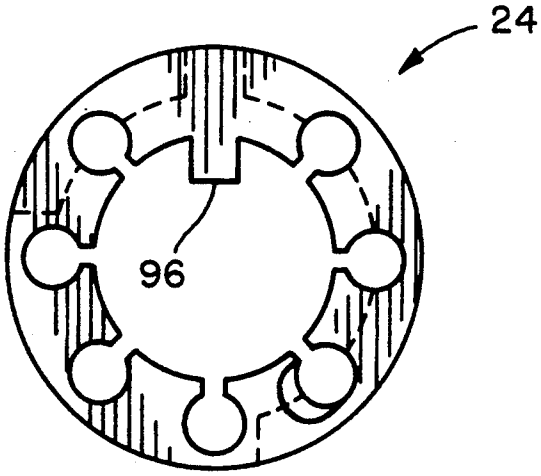

FIG. 7B

COMPUTER EQUIPMENT LOCK

CROSS REFERENCES TO RELATED APPLICATIONS

This is a continuation of prior U.S. patent application No. 07/891,783 now abandoned, filed Jun. 1, 1992.

FIELD OF THE INVENTION

The present invention relates generally to tumbler locks and, more particularly, relates to a tumbler lock for use in securing a portable computer or other suitably adapted object in one location.

BACKGROUND OF THE INVENTION

In the past several years the use of portable computers and other high-priced, portable electronic devices have increased dramatically. While the size of these devices promotes efficiency due to their ease of transportation, the portable nature of these devices also renders them susceptible to theft. Accordingly, as these devices become increasingly portable, there is a corresponding need to enhance the theft protection of these devices through adaptable locking means.

A variety of tumbler locks, such as the well-known axial pin tubular locks, are presently available for use in applications such as vending machines. Such locks, however, have been used primarily in locking applications associated with stationary objects.

Prior to the present invention, no acceptable lock specifically adapted for use in securing portable computers or similar devices has been available. Rather, users of these portable devices have relied primarily on secondary security measures, such as maintaining the device in a locked drawer when not in use, or attaching a locking device to the handle of the computer for securement during periods of non-use. These security measures, however, have proved highly ineffective due to the ease with which they are overcome. A shortcoming of utilizing a chain or some other standard device around the handle of a portable computer lies in the fact that the handle may be easily broken away with relatively little effort, thereby permitting the theft of the computer or other protected apparatus. Locking the computer in a storage area such as a desk drawer or a file cabinet, when not in use, represents an alternative solution to the potential threat of theft. As will be recognized, however, such securement measures may lead to decreased efficiency regarding the use of the computer due to the expenditure of additional time and effort in securing the computer in the storage area and then retrieving it prior to use.

Accordingly, it has been proposed that a lock which may be inserted into a standardized and dedicated locking aperture within the body of a portable computer or other device to be secured would overcome the prior disadvantages and problems. Such a lock should have high security attributes which will preclude a thief from easily overcoming the lock by means of either picking or forced disengagement of the lock due to withdrawal of the locking member.

OBJECTS AND SUMMARY OF THE INVENTION

It is the general aim of the present invention to provide an improved computer equipment lock of an axial pin tubular configuration which is easily operated and securely attachable to a standardized dedicated slot

provided in a computer housing or the like. It is a related object to provide such a computer equipment lock which is highly resistant to picking or other disengagement attempts.

It is yet a further object to provide a computer equipment lock of the foregoing type which can be economically manufactured and is based on an uncomplicated locking mechanism.

These and other objects of this invention are realized by providing a lock having an inner shell and an outer shell, with the outer shell comprising a front portion and a rear portion. The front portion of the outer shell is attached to a looped cable which may be wrapped around a solid stationary object and then placed over the lock prior to the insertion of the lock's spindle head and anti-rotation extension arms into a dedicated computer port, thereby creating a closed security loop. The rear portion of the outer shell is in sliding engagement with the remainder of the lock assembly and is spring-biased toward the spindle head. Hence, after insertion of the spindle head into the computer, the rear portion of the outer shell will move towards the head and hence eliminate any gap between the lock assembly and the computer which might otherwise exist, thereby preventing manipulation of the spindle or anti-rotation arms. The anti-rotation arms, which may be attached to plate means disposed within the lock body, prevent disengagement of the spindle head through rotation of the lock shell. The sliding engagement of the rear portion of the outer shell is permitted by the use of slotted engagement means between the outer shell and the inner shell.

In operation, locking rotation of the spindle is permitted by the rotation of a driver pin sleeve which is connected to the spindle. This connection between the driver pin sleeve and the spindle is effected by means of a slotted indenture and pin means. This slotted indenture further prevents the withdrawal of the spindle from the locking mechanism by means of abutting engagement with detent means located on the inner surface of the drive sleeve. The locking mechanism of the present invention is provided with a retaining plate abutting a non-rotatable tumbler sleeve. Both the pin plate and adjacent tumbler sleeve are provided with central slots matching the general geometry of the spindle head, thereby permitting the withdrawal of the spindle only when the head is properly aligned. The pin plate is held in place by a combination of spring means and the splined configuration of the inner shell. The tumbler sleeve is held in place by pin means disposed through the inner sleeve and engaging slotted indenture means on the outer perimeter of the tumbler sleeve. Finally, the spindle itself makes use of a gradual tapered transition zone between the spindle body and neck, thereby substantially reducing the likelihood of spindle failure.

BRIEF DESCRIPTION OF THE DRAWINGS

FIGURE **1** is a perspective view of the computer equipment lock of the present invention.

FIG. **2** is an exploded perspective view of the computer equipment lock according to the preferred embodiment of the present invention.

FIG. **3** is a sectional side view of the computer equipment lock taken along line **3—3** of FIG. **1**.

FIGS. **4A-B** are end and side views of the retaining plate for use in the computer equipment lock of the present invention.

FIG. 5 is an isolated perspective view of a locking spindle for use in the computer equipment lock of the present invention.

FIGS. 6A-B are front and rear views of a stationary tumbler sleeve for use in the computer equipment lock of the present invention.

FIGS. 7A-B are front and rear views of a rotatable driver sleeve for use in the computer equipment lock of the present invention.

While the invention will be described and disclosed in connection with certain preferred embodiments and procedures, it is not intended to limit the invention to those specific embodiments. Rather it is intended to cover all such alternative embodiments and modifications as fall within the spirit and scope of the invention.

DETAILED DESCRIPTION OF THE PREFERRED EMBODIMENT

Referring now to FIGS. 1-3, a tubular lock **10** according to the preferred embodiment of the present invention is shown generally in FIG. **1**, in exploded view in FIG. **2**, and in cross section in FIG. **3**. The lock **10** includes an outer shell having a forward portion **15** and a rear portion **20**. Housed within the outer shell is a non-rotatable inner shell **22** as best seen by reference to FIG. **2**. Telescoped within the inner shell **22** is a rotatable driver sleeve **24**. In the assembled state, the rotatable driver sleeve **24** is disposed in face to face relation with non-rotatable tumbler sleeve **26**. As will be discussed more fully below, the rotatable driver sleeve **24** houses a multiplicity of driver pins **28** which cooperatively depress spring biased tumbler pins **30** housed within the non-rotatable tumbler sleeve **26** upon insertion of a proper key member **32** (FIG. **2**), thereby permitting relative rotation of driver sleeve **24**. Extending through sleeves **24**, **26** is a locking spindle **34**, described in greater detail below. As described more fully below, connecting means **36** are disposed between rotatable driver sleeve **24** and locking spindle **34**, thereby serving to transmit the rotational movement of driver sleeve **24** to the spindle **34**.

In the preferred embodiment of the present invention, the forward portion **15** of the outer shell comprises a cable ring structure as shown most clearly in FIGS. **2** and **3**. The cable ring structure comprises a substantially circular body portion **38** and an integrally formed stem portion **40**. As seen most clearly in FIG. **3**, the stem portion **40** is provided with a substantially hollow center portion **42** which may receive cable means **44**.

As shown, the preferred embodiment of the cable means for use in the present invention includes an internal core **46** formed from stainless steel aircraft cable and an external sleeve **48** formed from PVC or a like material. The internal core includes a proximal end portion **50** which extends beyond the end of the sleeve **48**. As illustrated, in the preferred embodiment the proximal end portion **50** of the cable core **46** is receivable within the hollow center portion **42** of the outer shell stem **40**.

As illustrated in FIG. **1**, the distal end of the cable **44** is formed into a loop **52** in a manner well known to those skilled in the art. In operation of the lock **10**, the loop **52** may be either connected to a stationary body by means o#a second locking device (not shown) or passed over the rear end **20** of the tubular lock prior to insertion of the spindle into an appropriate locking port, thereby creating a locked circuit between the tubular lock **10** and the attached cable means **44**.

As will be appreciated by those skilled in the art, the use of PVC sleeve **48** to cover the cable means **46** permits the cable means to be wrapped around stationary objects prior to the loop **52** being disposed over the lock **10** of the present invention without damaging the surface of the stationary object.

As best seen by reference to FIG. **3**, in the preferred embodiment of the present invention, the rear portion **20** of the outer shell is provided with a rear surface **54** of a stepped configuration. Essentially, the rear surface **54** is comprised of a substantially planar section **56** having a lowered shoulder member **58** at the perimeter of the outer shell and a raised shoulder member **60** at the interior thereof.

In keeping with the preferred embodiment of the present invention, a scuff plate **62** will be attached to the rear surface **54** of the outer shell **20**. The scuff plate **62** is secured in place by adhesive means as are well known to those skilled in the art as well as by geometric cooperation with shoulder members **58**, **60** of rear surface **54**.

Disposed within the outer shell portions **15**, **20** is an inner shell **22** which is shown most clearly in FIG. **2**. As shown, the forward face of the inner shell **22** has a substantially circular perimeter with indent means **64** for properly aligning and guiding key **32** into contacting relation with driver pins **28**. The body portion **66** of the inner shell **22** is of a substantially solid cylindrical configuration. As shown, a bore hole **68** and a slot **70** are disposed within inner shell **22** for respectively accepting a first retaining pin **72** and a second retaining pin **74**.

As shown most clearly in FIG. **3**, retaining pin **72** is disposed between inner shell **22** and non-rotatable tumbler sleeve **26** while retaining pin **74** is disposed between the outer shell **20** and slot **70** housed within inner shell **22**. As will be appreciated, this attachment permits the rear portion **20** of the outer shell to slide with relation to inner shell **22** and spindle **34**.

In a preferred embodiment of the present invention, the spindle **34** will comprise a head portion **76**, a neck portion **77** and a body portion **78**. The spindle head **76** and neck **77** will preferably form a T-shaped cross section. In actual locking operation, the T-shaped spindle will be inserted into a slot provided in a computer or other portable device to be secured (not shown). The geometry of the slot should be such that the head **76** of spindle **34** may be inserted or withdrawn only when the spindle and slot are properly aligned. The rotatable driver sleeve **24** and connected spindle **34** will then be rotated approximately 90° in the manner described below, thereby preventing the withdrawal of the lock **10** through the application of an axial force.

In order to prevent the disengagement of the lock through the rotation of the entire mechanism, the preferred embodiment of the present invention is provided with a retaining plate **80** which is illustrated in FIGS. **2**, **4A** and **4*b***. Retaining plate **80** includes a slotted passage **81** through which spindle head **76** may pass when the spindle **34** and retaining plate **80** are properly aligned. The retaining plate **80** also preferably includes extensive members **82*a***, **82*b*** which will extend rearwardly along spindle neck **78** after insertion of spindle head **76** through passage **81**. As will be recognized by those skilled in the art, when the retaining plate **80** and spindle **34** are properly aligned as shown in FIG. **3**, extensive members **82*a***, **82*b*** may "follow" the head **76** into an appropriate slot provided in the device to be secured. During rotation of spindle head **76** within the slot provided in the computer, members **82*a***, **82*b*** remain sta-

tionary. Hence, the potential for rotational manipulation of the lock is substantially eliminated.

As will be recognized, in order to provide a high degree of security, the retaining plate **80** must be well secured against rotation within the lock **10**. In a preferred embodiment of the present invention, this securement is achieved by means of the cooperative geometric engagement between peripheral segments **83***a*–**83***c* and the matching spline detail of inner shell **22**.

Once the head **76** and retaining plate members **82***a*, **82***b* are in locked engagement with the device to be secured, internally disposed spring means **85** serve to bias rear portion **20** of the outer shell towards the spindle head **76**, thereby reducing the gap between rear scuff plate **62** and the slot provided in the computer or other device, thereby substantially covering the anti-rotation arms **82***a*, **82***b* and reducing the potential for lock manipulation and damage. The internally disposed spring means **85** also provide axial force directed against retaining plate **80**, thereby providing added stability to the overall lock structure.

The preferred embodiment of the spindle for use in the lock of the present invention is shown in FIG. **5**. As illustrated, the spindle is substantially "T" shaped and includes a substantially cylindrical body portion **78** and a substantially cylindrical neck portion **77** having a diameter which is less than that of the body portion **78**. As previously indicated, head portion **76** is disposed at the end of neck portion **77** to form a T-shaped member for insertion into a geometrically similar slotted port on the portable computer or other device to be secured. In the preferred embodiment of the present invention, the largest cross sectional dimension of the spindle head **76** will slightly exceed the diameter of the body portion **78**, thus precluding withdrawal of the spindle through driver sleeve **24**. The smallest cross sectional dimension of the spindle head will preferably be substantially equivalent to the diameter of the neck portion **77**.

The significance of this spindle design is best understood by reference to FIGS. **6**A and **6**B showing, respectively, forward and rear views of the non-rotatable tumbler sleeve **26**. As illustrated, the inner surface of the tumbler sleeve **26** is provided with support surfaces **90**, **91** which are maintained in contacting relation with the outer surface of body portion **78** of spindle **34**. The inner surface of the tumbler sleeve is also provided with indentures **92**, **93** which permit spindle head **76** to pass through the tumbler sleeve **26** when the proper respective alignment between these components is achieved. The non-rotatable tumbler sleeve thus provides a stable support for the spindle **34** while at the same time permitting passage of the spindle head **76** during the assembly process.

With regard to one important aspect of the present invention, the spindle **34** is provided with a gradual transition zone **94** (FIG. **3**) located between neck **77** and body portion **78**. As will be recognized, the use of such a rounded transition zone reduces the potential for spindle failure since the forces applied to the spindle are distributed across a broad surface, thus avoiding the concentration of forces at one location. Conversely, spindles utilized in the past have often incorporated sharp-edged transition zones, leading to the potential for catastrophic failure at high energy surfaces such as corners and the like.

The forward and rear faces of rotatable driver sleeve **24** are illustrated in FIGS. **7**A and **7**B respectively. As shown, the driver sleeve is provided with internally disposed detent means **96** extending into the central portion thereof. As shown in FIG. **5**, the body portion **78** of spindle **34** is provided with a groove **98** extending from the forward face **100** of the spindle to a point **102** lying forward of the neck portion **77**. In an important aspect of the present invention, groove **98** cooperatively engages the detent means **96** of the driver sleeve **24**. Accordingly, when the spindle **34** and the driver sleeve **24** are in engagement, relative axial movement is restricted by the length of the groove **98**.

As best illustrated in FIG. **3**, the groove **98** in spindle **34** is of a substantially uniform depth over its entire length except for a depressed bore **104**. As previously indicated, the driver sleeve **24** and the spindle **34** are attached by connecting pin **36** illustrated in FIGS. **2** and **3**. This connecting pin **36** is inserted through the driver sleeve bore hole **106** and into depressed bore **104** located in groove **98**. As will be appreciated by those skilled in the art, the placement of depressed bore **104** within groove **98** enhances the ease of assembly since proper radial alignment between the driver sleeve **24** and spindle **34** is readily achieved through engagement of the detent means **96** with groove **98**.

In addition to the proper radial alignment between the driver sleeve **24** and spindle **34**, proper axial alignment between these components is also needed for insertion of pin **36** through the driver sleeve bore hole **06** and into the spindle bore hole **104**. In the preferred embodiment of the present invention, the driver sleeve bore hole **106** and spindle bore hole **104** will be properly aligned when the detent **96** of the driver sleeve comes into abutting relation with the terminal point **102** of groove **98**, thus substantially simplifying the insertion of connecting pin **36**.

Ease of assembly in the lock **10** of the present invention is further enhanced by the use of slotted pin engagement means **108** on the outer surface of non-rotatable tumbler sleeve **26**. As illustrated in FIGS. **2** and **3**, rotation of tumbler sleeve **26** is prohibited by means of a retaining pin **72** and engaging slot **108**. As will be appreciated, the use of slot **108** rather than a bore hole enhances the ease of assembly as well as simplifying the manufacturing process, since the need to achieve close tolerances between the inner shell **22** and the tumbler sleeve **26** of each individual lock is substantially reduced.

With regard to the actual locking manipulation of driver sleeve **24** and spindle **34**, a series of angularly spaced tumbler pins **30** are slidably positioned within bores **110** defined through the non-rotatable tumbler sleeve **26** (FIG. **6**A) and function to normally retain the spindle **34** in its locked position wherein rotational movement is prohibited. The tumbler pins **30** are invariably urged forward by means of coiled compression springs **112**. These coiled compression springs are disposed within the bores **110** which retain the tumbler pins. Under the urging of the springs **112**, the tumbler pins **30** are disposed along the bores **110** in such a manner that the outer ends of the pins normally project outward beyond the shear plane **114** (FIG. **3**) formed at the inner face of the tumbler sleeve **26** and the driver sleeve **24** and into corresponding bores **116** defined through the driver sleeve **24** (FIGS. **7**A–**7**B). In its normal position, the tumbler pins lock the driver sleeve **24** and connected spindle **34** against rotational movement relative to the tumbler sleeve **26**.

However, such rotational motion is permitted if the tumbler pins are displaced rearwardly against the

urging of the compression springs in such a fashion that the forward ends of all the tumbler pins lie exactly at the shear plane **114**. This rearward displacement of the tumbler pins is effected by driver pins **28** positioned in an axially slidable manner within the bores **116** of the driver sleeve in such a way that the inner ends of the drive pins engage the outer ends of the corresponding tumbler pins. Generally, at least some of the driver pins are of different lengths so that alignment of all tumbler pins at the shear plane necessarily require the displacement of different driver pins by different predetermined distances. This requires the use of a properly coded key **32** to displace the driver pins through the predetermined distances in order to cause the rear ends of all of the tumbler pins to be simultaneously aligned at the shear plane so that the spindle **34** may be rotated. Coding of such conventional tumbler locks is accomplished by placing driver pins **28** of varying lengths inside predetermined bores **116** located in the driver sleeve **24**.

As can be seen from the foregoing detailed description, this invention provides a computer equipment lock of an axial pin tubular configuration which is highly-resistant to picking or other disengagement techniques. Further, the computer lock as described above may be easily and economically manufactured and is based on a well understood and uncomplicated locking mechanism.

I claim as my invention:

1. An improved lock construction for use in securing portable devices equipped with lock-accepting ports, said lock comprising, in combination:

an outer shell having forward and rearward ends, said outer shell including receiving means for accepting cable means, said rear end of said outer shell comprising a body portion and a protective rear plate portion,

an inner shell housed within said outer shell,

a rotatable driver sleeve telescoped into the forward portion of said inner shell,

a stationary tumbler sleeve disposed rearward of said rotatable driver sleeve in face-to-face relation with the rear end of said rotatable driver sleeve,

a locking spindle extending through, and rotatably mounted in, said stationary tumbler sleeve, said spindle comprising a body portion, a neck portion and a head portion, said head portion engageable with said lock-accepting portion on said device,

anti-rotation extensive means engageable with said lock-accepting port on said device, said extensive means precluding rotational manipulation of the lock following engagement between said spindle and said lock-accepting port,

means for translating rotation of said driver sleeve to said spindle,

driver and tumbler pins slidably mounted in axially extending and angularly spaced holes defined in said stationary tumbler sleeve and said rotatable driver sleeve and normally operable to prevent rotation of said spindle with respect to said stationary tumbler sleeve,

retaining means disposed in face-to-face relation with the rearward end of said tumbler sleeve, said face-to-face relation between said retaining means and said tumbler sleeve maintained by spring means disposed between said retaining means and the rearward portion of said outer shell.

2. The lock construction of claim **1** wherein said anti-rotation extensive means are integrally formed with said retaining means.

3. The lock construction of claim **1**, wherein said head and neck portions of said locking spindle form a substantially T-shaped structure lockingly engageable with slotted ports on said device.

4. The lock construction of claim **3** wherein the greatest cross sectional dimension of said spindle head portion is greater than the greatest cross sectional dimension of said spindle body portion.

5. The lock construction of claim **4** wherein the smallest cross sectional dimension of said spindle head portion is equivalent to the diameter of the spindle neck portion.

6. The lock construction of claim **1**, wherein said protective plate portion of the rear end of said outer shell is retained in place by adhesive means as well as by cooperative geometric engagement between said plate portion and said body portion of the rear end of said outer shell.

7. An apparatus for inhibiting theft of equipment having an external wall with a rectangular slot with preselected dimensions, the improvement comprising

an attachment mechanism including a housing, a spindle including a first portion rotatably mounted with the housing, a shaft fixed to the first portion and extending outwardly from the housing, and a crossmember conforming closely to the preselected dimensions of the slot and abutment means emanating from the housing and located on opposite sides of the shaft intermediate the housing and the crossmember, the abutment means and the shaft having cross-sectional dimensions closely conforming to the dimensions of the slot so that the crossmember, the shaft and the abutment means are insertable into the slot with the crossmember aligned with the abutment means to a position in which the crossmember is inside the external wall and the abutment means and the shaft occupy the slot, the spindle is rotatable 90 degrees by a locking mechanism to misalign the crossmember with the slot and the abutment means to attach the attachment mechanism rigidly to the external wall;

wherein the housing additionally includes a spring for biasing the housing against the external wall upon attachment of the attachment means to the equipment, and a cable connected to an immovable object and secured to the housing to inhibit theft of the equipment.

* * * * *

US005327752C1

(12) EX PARTE REEXAMINATION CERTIFICATE (5673rd)

United States Patent
Myers et al.

(10) **Number: US 5,327,752 C1**
(45) **Certificate Issued: Feb. 20, 2007**

(54) **COMPUTER EQUIPMENT LOCK**

(75) Inventors: **Gary L. Myers**, River Grove, IL (US); **Stewart Carl**, Palo Alto, CA (US); **Arthur H. Zarnowitz**, Burlingame, CA (US)

(73) Assignee: **Kensington Microware Ltd.**, San Mateo, CA (US)

Reexamination Request:
No. 90/007,674, Aug. 19, 2005

Reexamination Certificate for:

Patent No.:	**5,327,752**
Issued:	**Jul. 12, 1994**
Appl. No.:	**08/119,314**
Filed:	**Sep. 9, 1993**

Related U.S. Application Data

(63) Continuation of application No. 07/891,783, filed on Jun. 1, 1992, now abandoned.

(51) **Int. Cl.**
E05B 69/00 (2006.01)

(52) **U.S. Cl.** **70/58**; 70/14; 70/57; 70/491; 248/553; D8/331

(58) **Field of Classification Search** 70/14, 70/57, 58, 491; 248/553
See application file for complete search history.

(56) **References Cited**

U.S. PATENT DOCUMENTS

87,045	A	2/1869	Holmes
285,074	A	9/1883	Rhoades et al.
505,299	A	9/1893	Schneider
606,734	A	7/1898	Olmstead
611,646	A	10/1898	Parker

(Continued)

FOREIGN PATENT DOCUMENTS

CA	454901	3/1949
CA	791364	8/1968
CA	987121	4/1976
DE	329934	12/1920
DE	335741	4/1921

(Continued)

OTHER PUBLICATIONS

U.S. Appl. No. 09/441,142, Murray et al.
U.S. Appl. No. 09/603,240, Murray et al.
U.S. Appl. No. 09/603,394, Murray et al.
U.S. Appl. No. 09/804,973, Murray et al.
U.S. Appl. No. 10/455,072, Kuo.

(Continued)

Primary Examiner—Jimmy G. Foster

(57) **ABSTRACT**

An axial pin tubular lock for use in securing portable computers and other devices having spindle-accepting ports. The lock is bade up of an outer shell attached to a cable, an inner shell, a rotatable driver sleeve, a stationary tumbler sleeve, a rear scuff plate held in place by a combination of an adhesive and cooperative geometric engagement with the outer shell, a locking spindle extending through the driver and tumbler sleeves, a retaining plate and an anti-rotation extension which may be integrally formed with the retaining plate. The rotatable driver sleeve is equipped with an internally disposed detent which engage a groove on the spindle, thereby providing proper axial and radial alignment between the spindle and the driver sleeve. The internal surface of the stationary tumbler sleeve has an indented support surface, thus providing spindle support while permitting passage of the spindle head through the tumbler sleeve during assembly. The tumbler sleeve is held in place by a pin which engages a slot located on the sleeve's outer perimeter and by the retaining plate which is diposed against the sleeve's rearward face. The retaining plate is, in turn, held in place by both a spring and the spline detail of the inner shell. The spindle itself incorporates a curved surface design which distributes forces more evenly across the spindle surface, thereby reducing the potential for spindle failure.

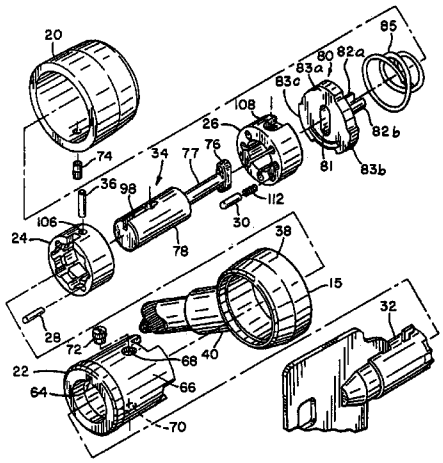

U.S. PATENT DOCUMENTS

786,842	A		4/1905	Robeson	
881,364	A		3/1908	Wheeler	
934,928	A		9/1909	Michel	
942,537	A		12/1909	Batdorf	
952,411	A		3/1910	Billy	
1,004,333	A		9/1911	Alsterberg	
1,050,276	A		1/1913	Johnson	
1,101,450	A		6/1914	Kerry	
1,432,546	A		10/1922	Gillom	
1,452,471	A		4/1923	Kline	
1,470,937	A		10/1923	Schou	
1,534,936	A		4/1925	Fishchbach	
1,672,333	A		6/1928	Miller	
1,786,511	A		12/1930	Warren	
1,978,935	A		10/1934	Douglas	
2,001,354	A		5/1935	Smith	
2,102,583	A		12/1937	Alberg	
2,109,109	A		2/1938	Finch	
2,130,216	A		9/1938	Zaninovich	
2,172,208	A	*	9/1939	Kurtzon	70/14
2,190,661	A		2/1940	Hauer	
2,383,397	A		8/1945	Lofqwist	
2,405,400	A		8/1946	Butterfiled	
2,435,876	A		2/1948	De Swart	
2,469,874	A		5/1949	Fetsko, Jr.	
2,480,682	A		8/1949	McKinzie	
2,530,560	A		11/1950	Young	
2,577,956	A		12/1951	Elsberg	
2,594,012	A		4/1952	Griffin	
2,660,084	A		11/1953	Newman	
2,677,261	A		5/1954	Jacobi	
2,729,418	A		1/1956	Maynard	
2,800,090	A		7/1957	Reid	
2,963,310	A		12/1960	Abolins	
3,091,011	A		5/1963	Campbell	
3,101,695	A		8/1963	Honeyman, Jr.	
3,130,571	A		4/1964	Neumann	
3,136,017	A		6/1964	Preziosi	
3,171,182	A		3/1965	Danehy	
3,174,384	A		3/1965	Vanni	
3,200,694	A		8/1965	Rapata	
3,211,408	A		10/1965	Schaefer	
3,213,745	A		10/1965	Dwyer	
3,220,077	A		11/1965	Newcomer, Jr. et al.	
3,276,835	A		10/1966	Hall	
3,469,874	A		9/1969	Mercurio	
3,486,158	A		12/1969	Soltysik et al.	
3,521,845	A		7/1970	Sweda et al.	
3,590,608	A		7/1971	Smyth et al.	
3,625,031	A		12/1971	Alley, III	
3,634,963	A		1/1972	Hermann	
3,664,163	A		5/1972	Foote	
3,722,239	A		3/1973	Mestre	
3,727,934	A		4/1973	Averbook et al.	
3,737,135	A		6/1973	Bertolini	
3,754,420	A		8/1973	Oellerich	
3,765,197	A		10/1973	Foote	
3,771,338	A		11/1973	Raskin	
3,772,645	A		11/1973	Odenz et al.	
3,782,146	A		1/1974	Franke	
3,785,183	A		1/1974	Sander	
3,798,934	A		3/1974	Wright et al.	
3,826,510	A		7/1974	Halter	
D232,416	S		8/1974	Gazda et al.	
3,836,704	A		9/1974	Coules	
3,859,826	A		1/1975	Singer et al.	
3,866,873	A		2/1975	Bohli	
3,875,645	A		4/1975	Tucker et al.	
3,905,570	A		9/1975	Nieuwveld	
3,910,079	A		10/1975	Gassaway	
3,910,081	A		10/1975	Pender	
3,939,752	A		2/1976	Koscik	
3,986,780	A		10/1976	Nivet	
3,990,276	A		11/1976	Shontz	
3,999,410	A		12/1976	Hall	
4,003,228	A		1/1977	Lievens et al.	
4,004,440	A		1/1977	Dreyer	
4,007,613	A		2/1977	Gassaway	
4,018,339	A		4/1977	Pritz	
4,028,913	A		6/1977	Falk	
4,028,916	A		6/1977	Pender	
4,047,748	A		9/1977	Whaley et al.	
4,055,973	A		11/1977	Best	
4,057,984	A	*	11/1977	Avaiusini	70/58
4,065,083	A		12/1977	Gassaway	
4,066,195	A		1/1978	Dickler	
4,066,231	A		1/1978	Bahner	
4,104,951	A		8/1978	Leitner	
4,114,409	A		9/1978	Scire	
4,118,902	A		10/1978	Saxton	
4,123,922	A		11/1978	Kuenstler	
4,131,001	A		12/1978	Gotto	
4,212,175	A		7/1980	Zakow	
4,223,542	A		9/1980	Basseches	
4,252,007	A		2/1981	Kerley	
4,263,833	A		4/1981	Loudin	
4,300,371	A		11/1981	Herwick et al.	
4,311,883	A		1/1982	Kidney	
4,337,462	A		6/1982	Lemelson	
4,391,110	A		7/1983	Nielsen	
4,394,101	A		7/1983	Richer	
4,418,550	A		12/1983	Hamilton	
4,419,034	A		12/1983	DiMartino	
4,442,571	A		4/1984	Davis et al.	
4,448,049	A		5/1984	Murray	
4,462,233	A		7/1984	Horetzke	
4,466,259	A		8/1984	Osgood	
4,471,980	A		9/1984	Hickman	
4,478,545	A		10/1984	Mizusawa	
4,501,460	A		2/1985	Sisler	
4,502,305	A		3/1985	Bakker	
4,527,405	A		7/1985	Renick et al.	
4,570,465	A	*	2/1986	Bennett	70/18
4,579,492	A		4/1986	Kazino	
4,584,856	A		4/1986	Petersdorff et al.	
4,586,843	A		5/1986	Henge et al.	
4,593,273	A		6/1986	Narcisse	
4,598,272	A		7/1986	Cox	
4,603,829	A		8/1986	Koike et al.	
4,610,587	A		9/1986	Wollar	
4,616,490	A		10/1986	Robbins	
4,640,106	A		2/1987	Derman	
4,651,544	A		3/1987	Hungerford	
4,655,057	A		4/1987	Derman	
4,656,848	A		4/1987	Rose	
4,667,491	A		5/1987	Lokken et al.	
4,676,080	A		6/1987	Schwarz	
4,680,949	A		7/1987	Stewart	
4,685,312	A		8/1987	Lakoski et al.	
4,691,891	A		9/1987	Dionne	
4,692,968	A		9/1987	Girard	
4,704,881	A		11/1987	Sloop, Sr.	
4,733,840	A	*	3/1988	D'Amore	248/205.3
4,738,428	A	*	4/1988	Themistos et al.	248/551
4,741,185	A		5/1988	Weinert et al.	
4,768,361	A		9/1988	Derman	
4,770,583	A		9/1988	Lindberg	
4,779,434	A		10/1988	Derman	
4,785,291	A		11/1988	Hawthorne	
4,801,232	A		1/1989	Hempel	
4,804,943	A		2/1989	Soleimani	

4,805,426	A		2/1989	Dimmick et al.
4,813,252	A		3/1989	Ray
4,826,193	A		5/1989	Davis
4,834,600	A		5/1989	Lemke
4,842,912	A		6/1989	Hutter, III
4,843,848	A		7/1989	Igelmund
4,856,304	A		8/1989	Derman
4,856,305	A		8/1989	Adams
4,858,455	A	*	8/1989	Kuo 70/491
4,862,716	A		9/1989	Derman
4,869,082	A		9/1989	Appelbaum
4,870,840	A		10/1989	Klein
4,893,488	A		1/1990	Klein
4,907,111	A		3/1990	Derman
4,907,716	A		3/1990	Wankel et al.
4,918,952	A		4/1990	Lakoski et al.
4,924,683	A		5/1990	Derman
4,924,693	A		5/1990	College
4,938,040	A	*	7/1990	Humphreys, Jr. 70/58
4,959,635	A		9/1990	Wilson
4,959,979	A		10/1990	Filipow et al.
4,964,285	A		10/1990	Lakoski
4,966,511	A		10/1990	Lee
4,969,342	A		11/1990	Marchiori
4,978,265	A		12/1990	DeWan
4,979,382	A		12/1990	Perry
4,985,695	A		1/1991	Wilkinson et al.
4,986,097	A		1/1991	Derman
4,993,244	A		2/1991	Osman
5,001,460	A		3/1991	Basson
5,001,854	A		3/1991	Derman
5,010,748	A		4/1991	Derman
5,022,242	A		6/1991	Povilaitis
5,024,072	A		6/1991	Lee
5,027,627	A		7/1991	Derman
5,050,836	A		9/1991	Makous
5,052,199	A		10/1991	Derman
5,063,763	A		11/1991	Johnson
5,067,151	A		11/1991	Inagaki
5,076,079	A		12/1991	Monoson
5,082,232	A		1/1992	Wilson
5,082,233	A		1/1992	Ayers et al.
5,099,663	A		3/1992	Dearstine
5,117,661	A		6/1992	Carl et al.
5,119,649	A		6/1992	Spence
5,135,197	A		8/1992	Kelley et al.
5,138,785	A		8/1992	Paterson
5,146,769	A		9/1992	Smith
5,154,456	A		10/1992	Moore
5,184,798	A		2/1993	Wilson
5,197,706	A		3/1993	Braithwaite et al.
5,223,815	A		6/1993	Rosenthal et al.
D337,040	S		7/1993	Carl
5,228,319	A		7/1993	Holley et al.
5,279,136	A		1/1994	Perry
5,317,304	A		5/1994	Choi
D350,473	S		9/1994	Simon
5,349,834	A		9/1994	Davidge
5,351,507	A		10/1994	Derman
5,351,508	A		10/1994	Kelley
5,361,610	A		11/1994	Sanders
5,370,488	A		12/1994	Sykes
5,377,512	A		1/1995	Kelley
5,381,685	A		1/1995	Carl et al.
5,390,514	A		2/1995	Harmon
5,390,977	A		2/1995	Miller
5,394,713	A		3/1995	Harmon
5,397,171	A		3/1995	Leach
5,398,530	A		3/1995	Derman
5,400,622	A		3/1995	Harmon
5,406,809	A		4/1995	Igelmund
5,412,959	A		5/1995	Bentley
5,421,667	A		6/1995	Leyden et al.
5,466,022	A		11/1995	Derman
5,473,917	A		12/1995	Say
5,489,173	A		2/1996	Hofle
5,493,878	A		2/1996	Murray et al.
5,502,989	A		4/1996	Murray et al.
5,520,031	A		5/1996	Davidge
D370,473	S		6/1996	Derman
5,548,981	A		8/1996	Kirk
5,579,657	A		12/1996	Makous
5,593,878	A		1/1997	Knopf et al.
5,603,416	A		2/1997	Richardson et al.
5,608,605	A		3/1997	Siow et al.
5,611,223	A		3/1997	Spitzer
5,622,064	A		4/1997	Gluskoter et al.
5,687,592	A		11/1997	Penniman
5,692,400	A		12/1997	Bliven et al.
5,709,110	A		1/1998	Greenfield et al.
5,722,268	A		3/1998	Choi
5,787,739	A		8/1998	Derman
5,791,171	A		8/1998	Kelley
5,794,463	A		8/1998	McDaid
5,836,183	A		11/1998	Derman
5,870,281	A		2/1999	Kim
5,875,657	A		3/1999	Kelley
5,913,907	A		6/1999	Lee
5,963,131	A		10/1999	D'Angelo et al.
5,983,679	A		11/1999	Reyes
6,000,251	A		12/1999	Murray et al.
6,000,252	A		12/1999	Murray et al.
6,006,557	A		12/1999	Carl et al.
6,038,891	A		3/2000	Zeren et al.
6,058,744	A		5/2000	Ling
6,081,974	A		7/2000	McDaid
6,112,561	A		9/2000	Carl
6,112,562	A		9/2000	Murray, Jr. et al.
6,133,830	A		10/2000	D'Angelo et al.
6,155,088	A		12/2000	Murray, Jr. et al.
6,170,364	B1		1/2001	Johnson
6,173,591	B1		1/2001	Derman
6,199,413	B1		3/2001	McDaid et al.
6,205,824	B1		3/2001	Miao
6,212,918	B1		4/2001	Krautin
6,227,017	B1		5/2001	Ingelmund
6,244,080	B1		6/2001	Sakurai
6,257,029	B1		7/2001	Liao
6,265,974	B1		7/2001	D'Angelo et al.
6,301,940	B1		10/2001	Derman et al.
6,317,936	B1		11/2001	McDaid et al.
6,360,405	B1		3/2002	McDaid et al.
6,401,502	B1		6/2002	Yang
6,449,992	B1		9/2002	Yu
6,513,350	B1		2/2003	Hurd et al.
6,553,794	B1		4/2003	Murray, Jr. et al.
6,588,241	B1		7/2003	Murray, Jr. et al.
6,591,642	B1		7/2003	Kuo
6,735,990	B1		5/2004	Murray, Jr. et al.
6,758,069	B2		7/2004	Derman
2003/0101778	A1		6/2003	Carl et al.
2004/0040350	A1		3/2004	Derman
2004/0206138	A1		10/2004	Murray et al.
2005/0150262	A1		7/2005	Murray et al.
2005/0150263	A1		7/2005	Murray et al.
2005/0178173	A1		8/2005	Kuo

FOREIGN PATENT DOCUMENTS

DE	361068	4/1923
DE	456219	2/1928
DE	557757	8/1932
DE	3202700	8/1983

DE	3407723	A1	9/1985
DE	3824393	C1	7/1989
DE	3824393		7/1989
FR	455740		8/1913
FR	877220		12/1942
FR	1026519		4/1953
FR	1085107		1/1955
FR	2308006		11/1976
FR	2636686	A1	3/1990
GB	447091		5/1936
GB	1256295		12/1971
GB	1376011		12/1974
GB	2109109	A	5/1983
GB	2234656	A	2/1991
IT	451949		10/1949
JP	37-7592		9/1935
JP	49-91096		11/1947
JP	57-25092		2/1957
JP	52-36813		9/1976
JP	57-179618		11/1982
NO	14095		5/1905
WO	WO 95/10680		4/1985
WO	WO 86/00396		1/1986
WO	WO 93/15295		8/1993
WO	WO 96/07002	A1	3/1996

OTHER PUBLICATIONS

U.S. Appl. No. 10/839,521, Murray et al.
U.S. Appl. No. 90/007,225, Stewart et al.
U.S. Appl. No. 90/007,221, Murray et al.
U.S. Appl. No. 10/970,060, Merrem et al.
U.S. Appl. No. 11/000,397, Merrem et al.
U.S. Appl. No. 11/009,813, Murray et al.
U.S. Appl. No. 11/009,335, Murray et al.
U.S. Appl. No. 11/035,946, Kuo.
Kablit Security System Catalog, pp. 7, 93, 1988. Computer and Office Equipment Security Catalog, 1990, Secure–It, Inc., 18 Maple Court, East Longmeadow, MA 01028.
Kensington Product Brochure for Kensington Apple Laser Writer and Macintosh Portable Security Systems, Computer and Office Equipment Security Catalog, 1990, Secure–It, Inc., 18 Maple Court, East Longmeadow, MA 01028.
Apple Security Bracket sold in AS kit.
Retaining Device Incorporated in Apple Computers.
U.S. Appl. No. 95/000,116, Murray, Jr. et al.
ACCO Brands, Inc. v. *Micro Security Devices, Inc.* Federal Circuit Court Order Granting Defendant's Motion for Summary Judgement, Jul. 23, 2002, 13 pages.
Passproof User Manual 1990, 5 pages.
Flexguard Security System, Philadelphia Security Products (no date on page) (1 page).
Los Angeles Times, Jan. 12, 1989, Part V, p. 10.
Kensington Microsaver Packaging and Manual (copyright 1992), 4 pages.

* cited by examiner

EX PARTE REEXAMINATION CERTIFICATE ISSUED UNDER 35 U.S.C. 307

NO AMENDMENTS HAVE BEEN MADE TO THE PATENT

AS A RESULT OF REEXAMINATION, IT HAS BEEN DETERMINED THAT:

The patentability of claims **1**–**7** is confirmed.

* * * * *